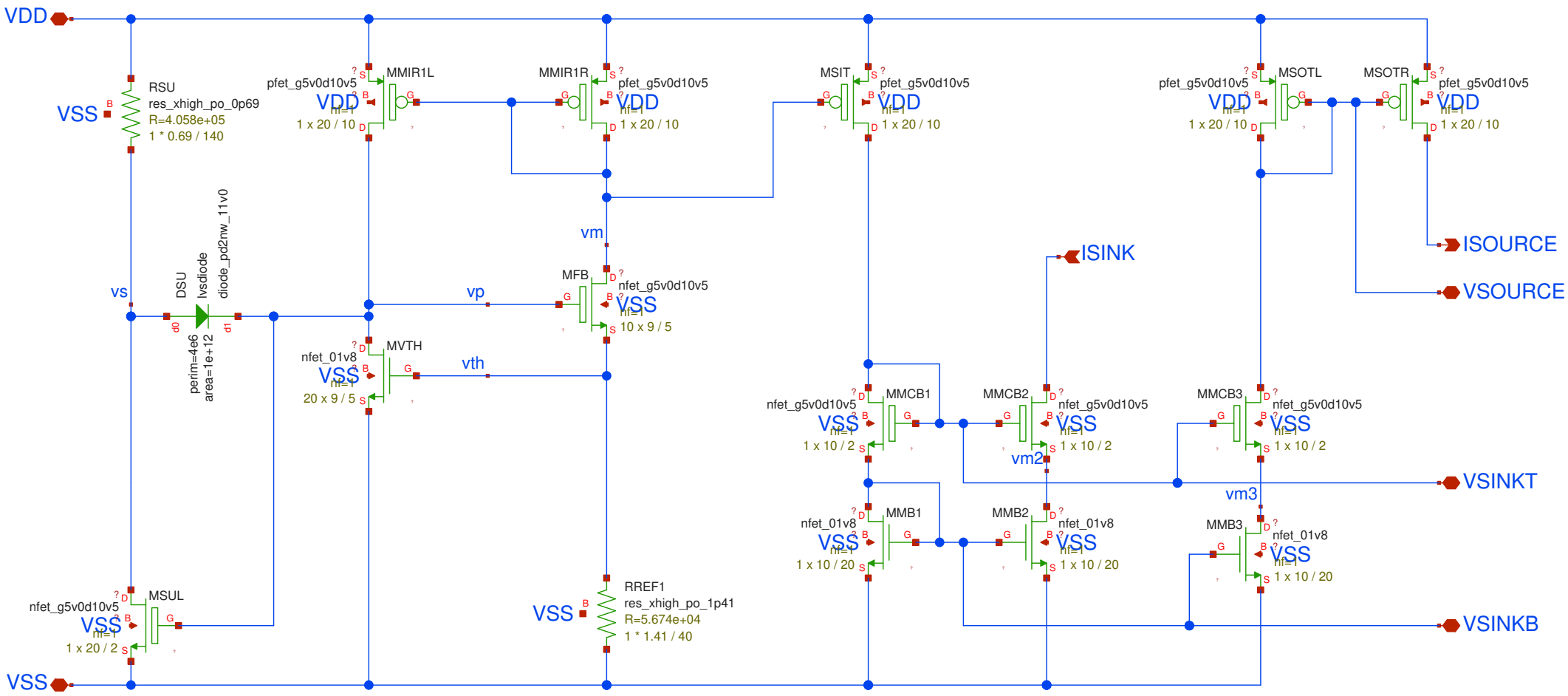
VDD
VSS
RSU
res_xhigh_po_0p69
R=4.058e+05
1 * 0.69 / 140
pfet_g5v0d10v5
MMIR1L
VDD
1 x 20 / 10
MMIR1R
pfet_g5v0d10v5
VDD
1 x 20 / 10
MSIT
pfet_g5v0d10v5
VDD
1 x 20 / 10
pfet_g5v0d10v5
MSOTL
VDD
1 x 20 / 10
MSOTR
pfet_g5v0d10v5
VDD
1 x 20 / 10
ISOURCE
VSOURCE
vm
ISINK
vs
DSU
lvsdiode
diode_pd2nw_11v0
perim=4e6
area=1e+12
vp
MFB
nfet_g5v0d10v5
VSS
10 x 9 / 5
nfet_01v8
MVTH
VSS
20 x 9 / 5
vth
nfet_g5v0d10v5
MMCB1
VSS
1 x 10 / 2
MMCB2
nfet_g5v0d10v5
VSS
1 x 10 / 2
vm2
MMCB3
nfet_g5v0d10v5
VSS
1 x 10 / 2
VSINKT
vm3
nfet_01v8
MMB1
VSS
1 x 10 / 20
MMB2
nfet_01v8
VSS
1 x 10 / 20
MMB3
nfet_01v8
VSS
1 x 10 / 20
VSINKB
nfet_g5v0d10v5
MSUL
VSS
1 x 20 / 2
VSS
RREF1
res_xhigh_po_1p41
R=5.674e+04
1 * 1.41 / 40
VSS