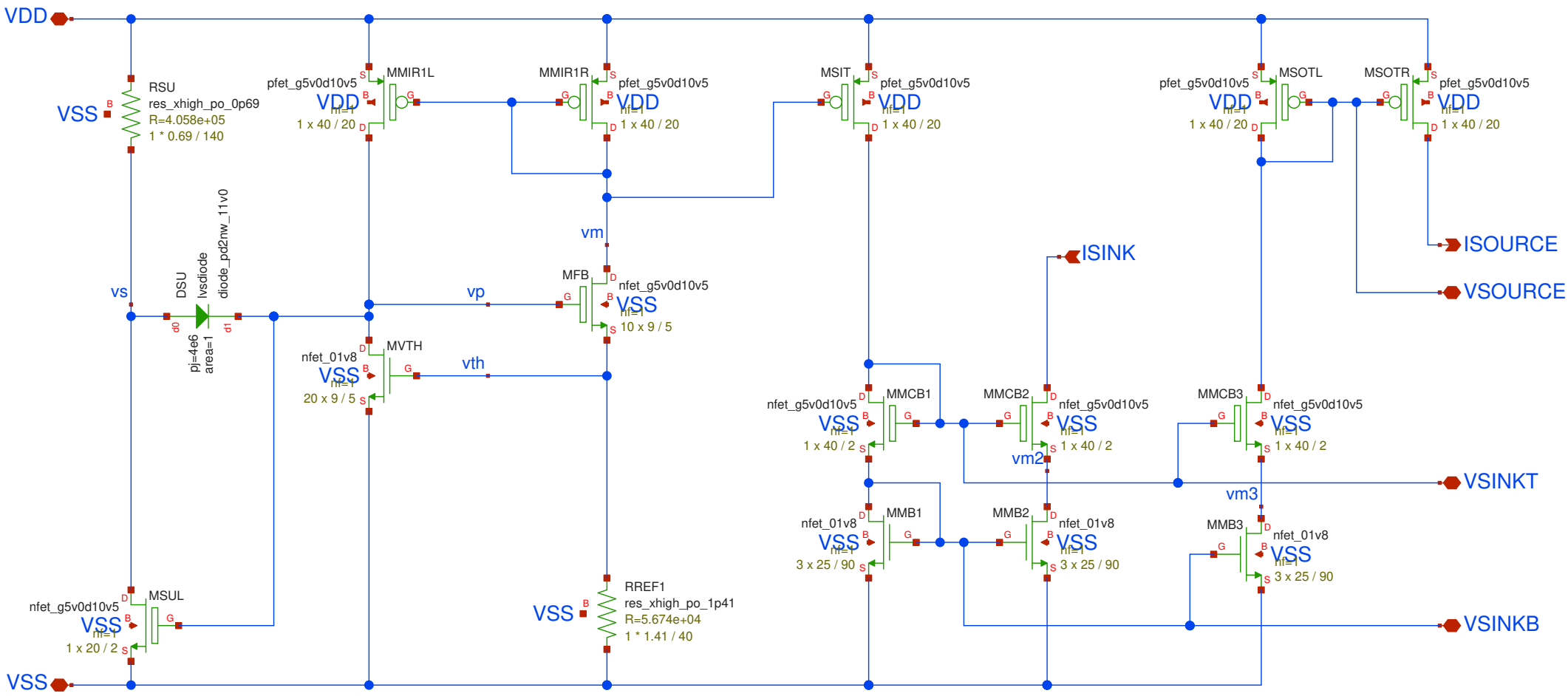
VDD
VSS
RSU
res_xhigh_po_0p69
R=4.058e+05
1 * 0.69 / 140
pfet_g5v0d10v5
MMIR1L
VDD
1 x 40 / 20
MMIR1R
pfet_g5v0d10v5
VDD
1 x 40 / 20
MSIT
pfet_g5v0d10v5
VDD
1 x 40 / 20
pfet_g5v0d10v5
MSOTL
VDD
1 x 40 / 20
MSOTR
pfet_g5v0d10v5
VDD
1 x 40 / 20
ISOURCE
VSOURCE
ISINK
vm
MFB
nfet_g5v0d10v5
VSS
10 x 9 / 5
vp
vs
DSU
lvsdiode
diode_pd2nw_11v0
pj=4e6
area=1
nfet_01v8
MVTH
VSS
20 x 9 / 5
vth
nfet_g5v0d10v5
MMCB1
VSS
1 x 40 / 2
MMCB2
nfet_g5v0d10v5
VSS
1 x 40 / 2
vm2
MMCB3
nfet_g5v0d10v5
VSS
1 x 40 / 2
VSINKT
vm3
nfet_01v8
MMB1
VSS
3 x 25 / 90
MMB2
nfet_01v8
VSS
3 x 25 / 90
MMB3
nfet_01v8
VSS
3 x 25 / 90
VSINKB
nfet_g5v0d10v5
MSUL
VSS
1 x 20 / 2
VSS
RREF1
res_xhigh_po_1p41
R=5.674e+04
1 * 1.41 / 40
VSS